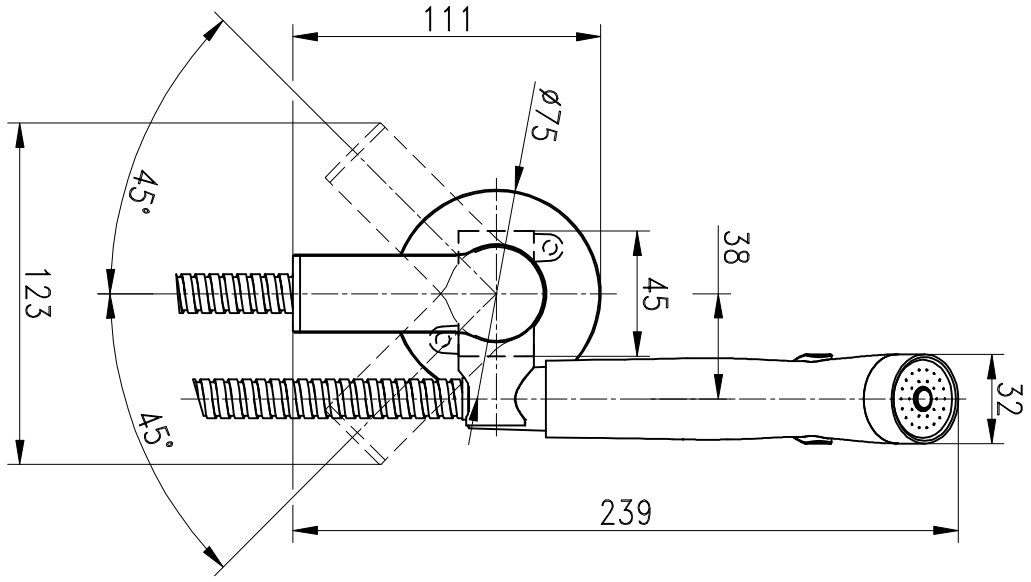
111
ø75
45°
123
45°
38
45
32
239

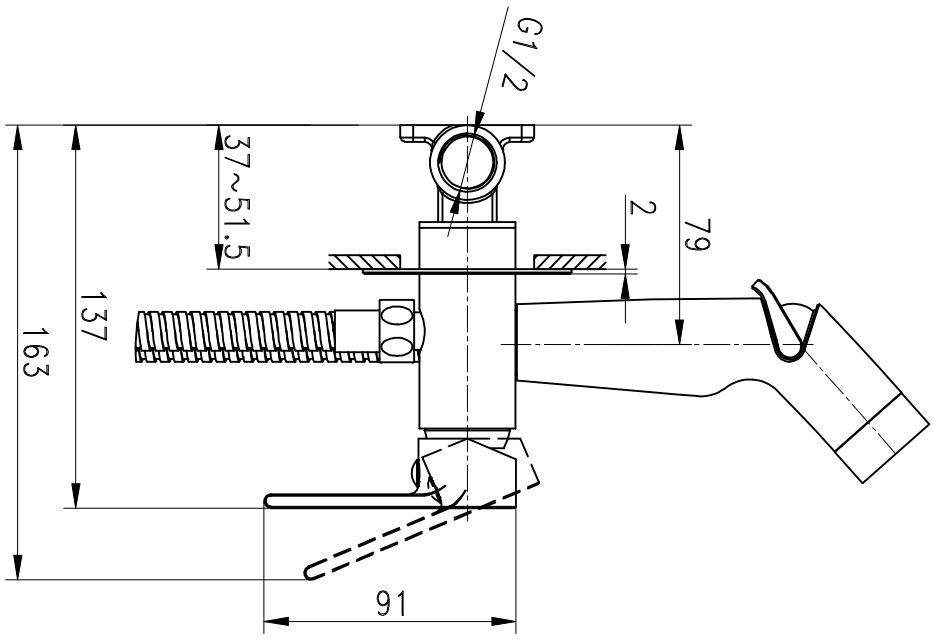
G1/2
37~51.5
2
79
137
163
91

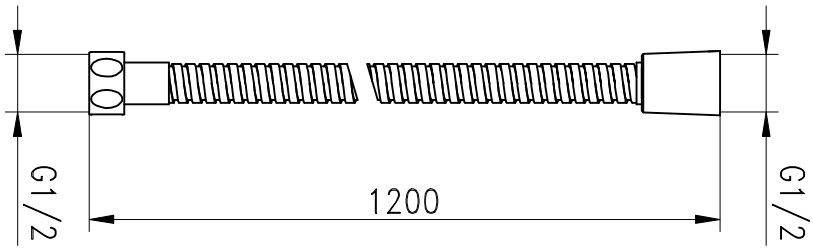
G1/2
1200
G1/2

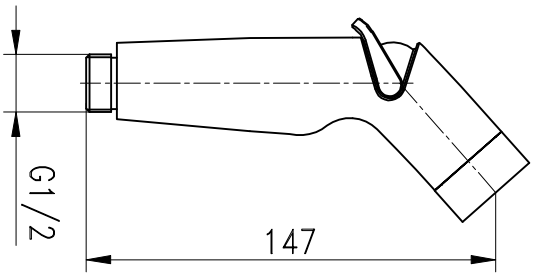
G1/2
147