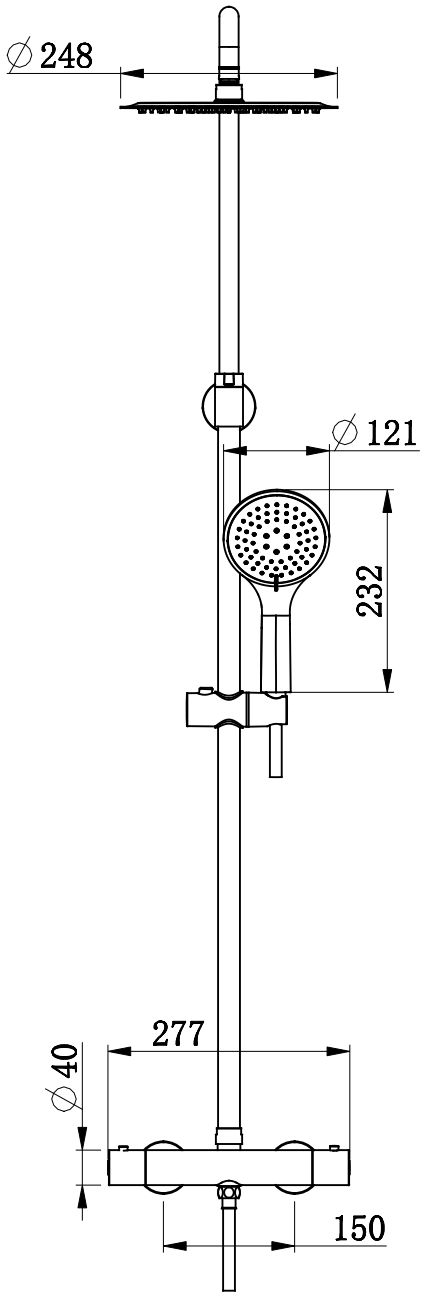
∅248
∅121
232
277
∅40
150

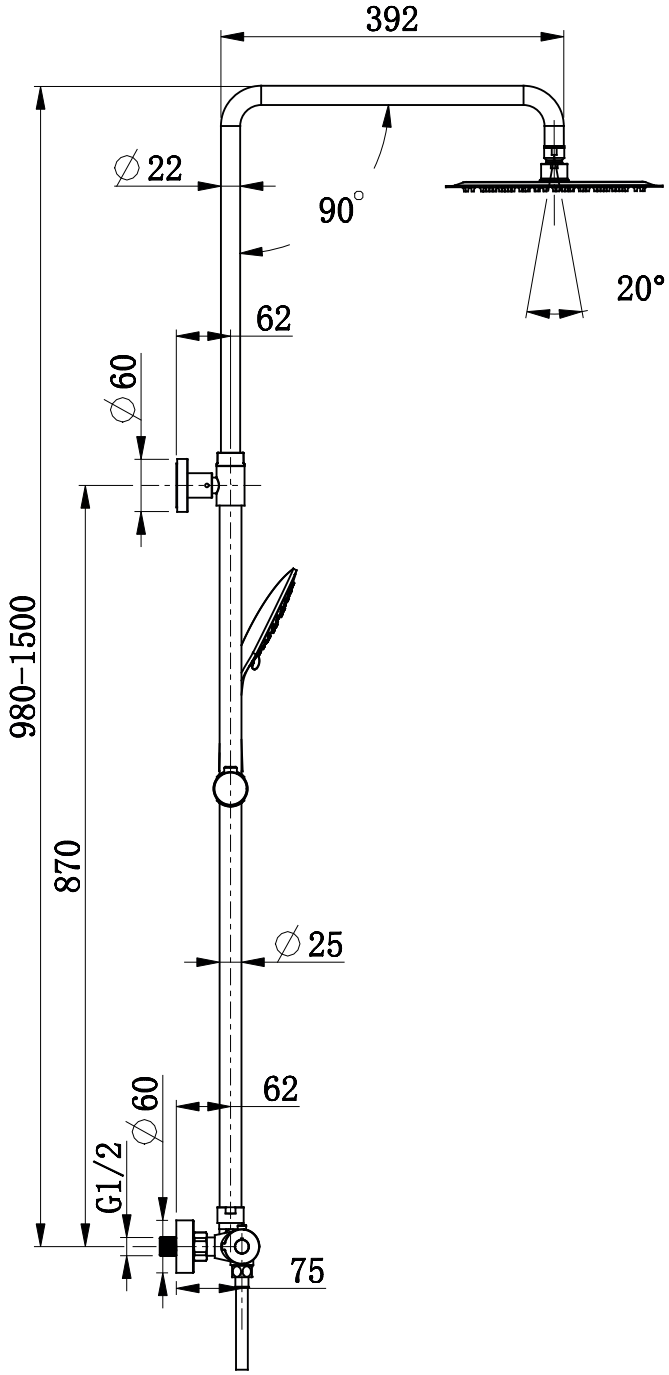
392
∅22
90°
20°
62
∅60
980–1500
870
∅25
62
∅60
G1/2
75