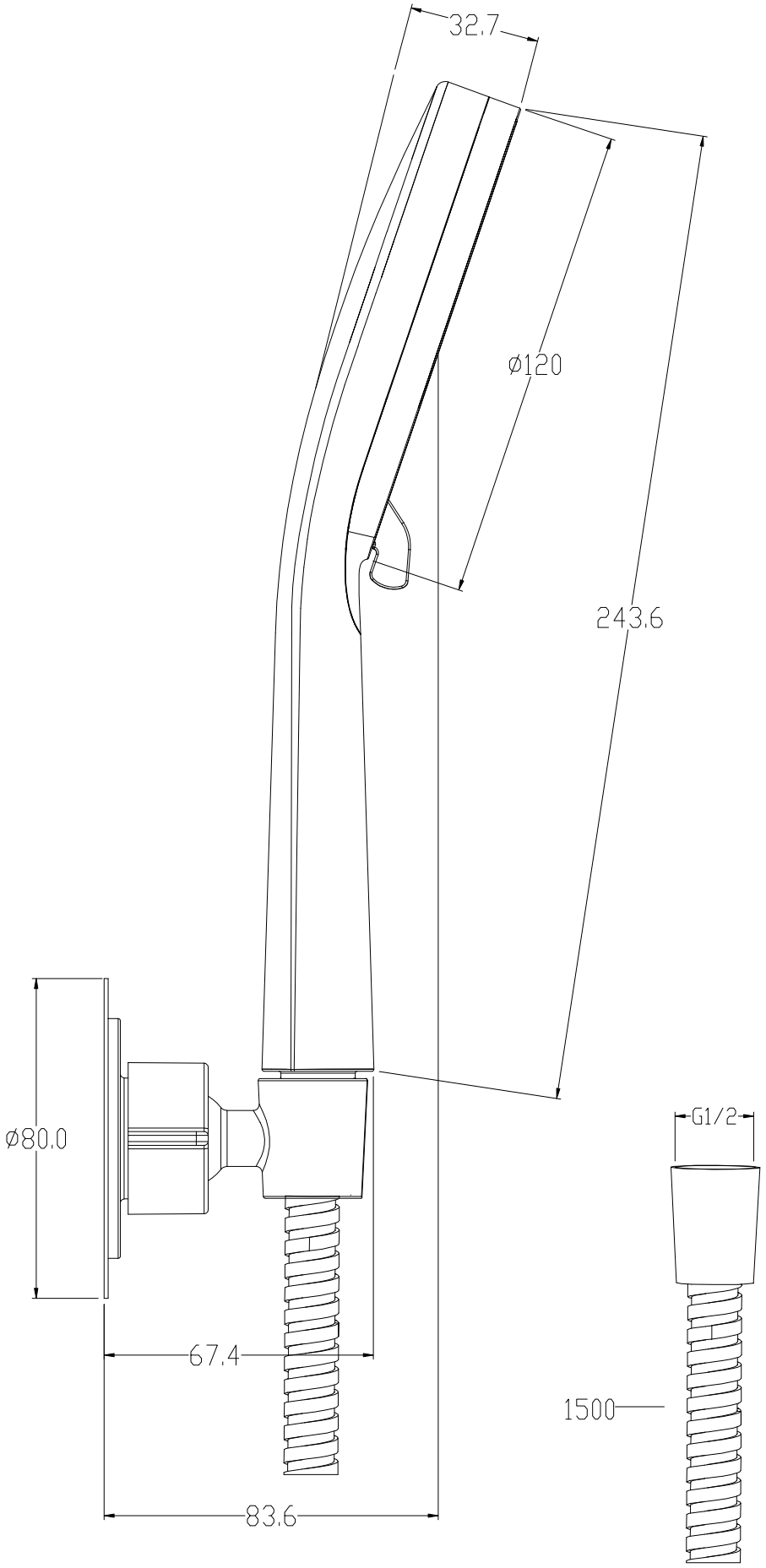
32.7
ø120
243.6
ø80.0
67.4
83.6
G1/2
1500